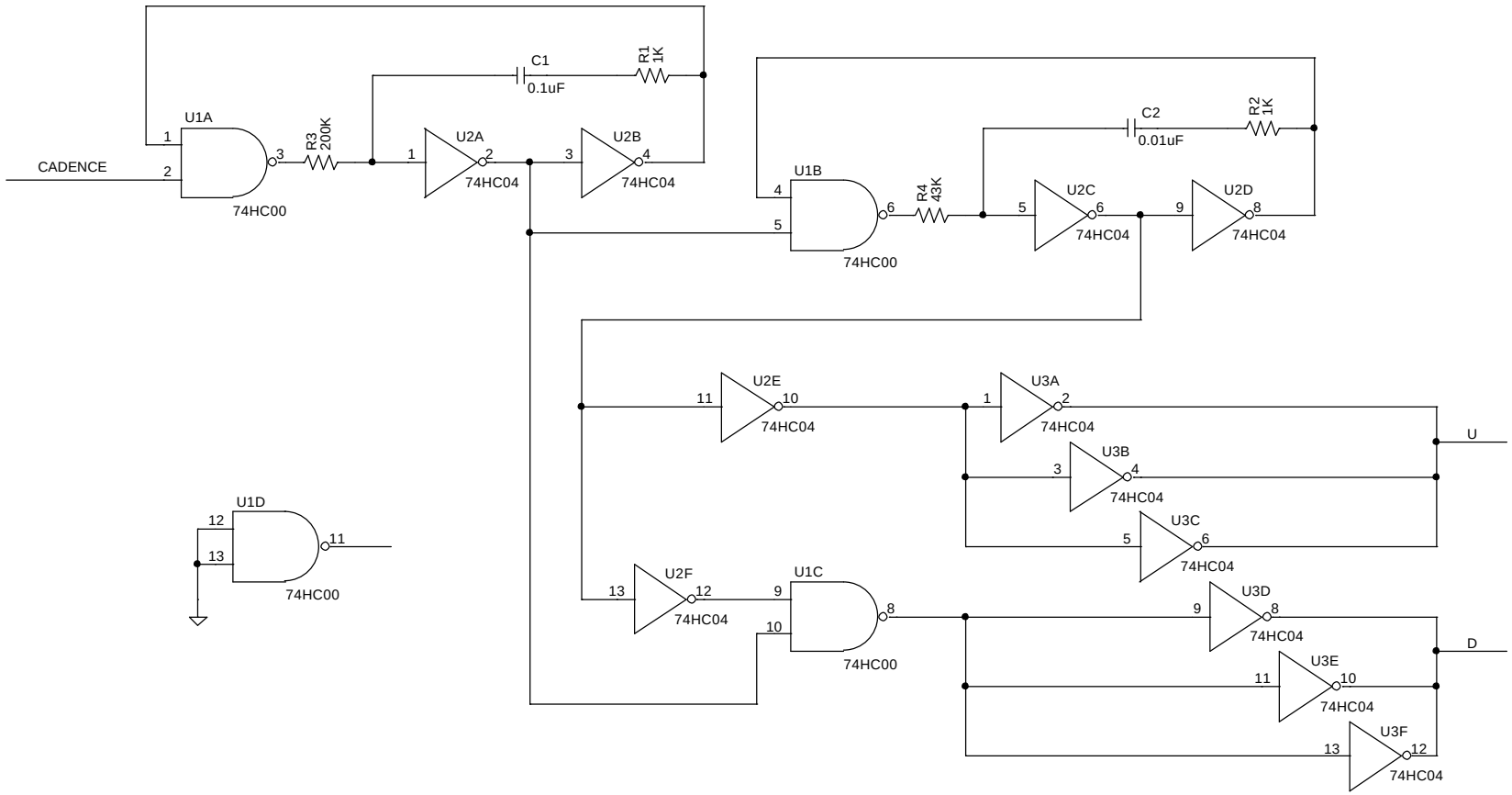

ANALOG INNOVATIONS, Inc.
824 E. CATHEDRAL ROCK DRIVE
PHOENIX, AZ 85048-6300
(480) 460-2350 FAX: (602) 557-0890

Title:
Ringer Driver

Size	FileName:	REV
A	D:\Projects\Expments\Caller-ID\RingOscNew_Wiring.sch	A

February 18, 2011, 4:55 P

Sheet 1 of 1
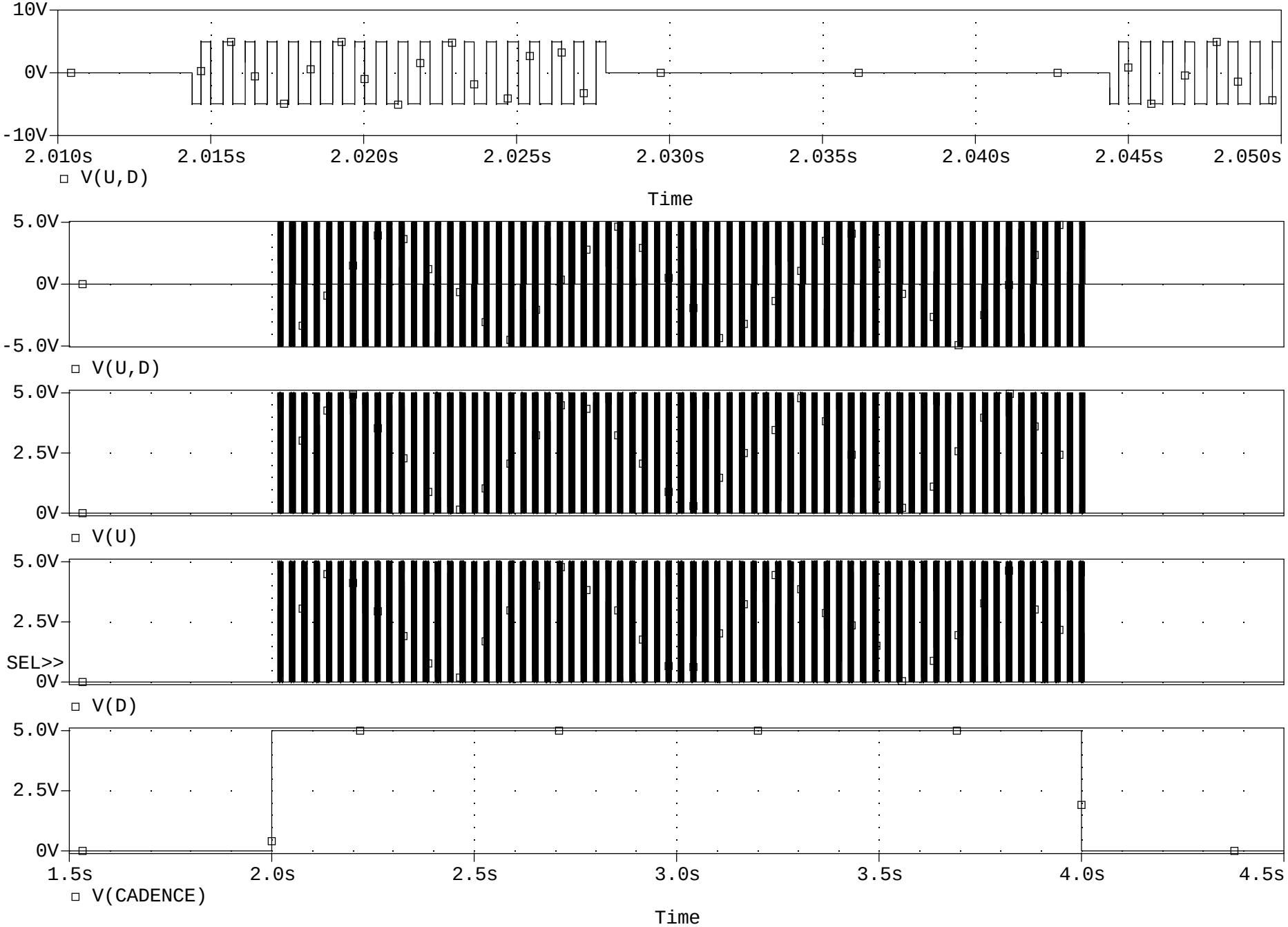
D:\Projects\Expments\Caller-ID\RingOscNew_SIM.pdf