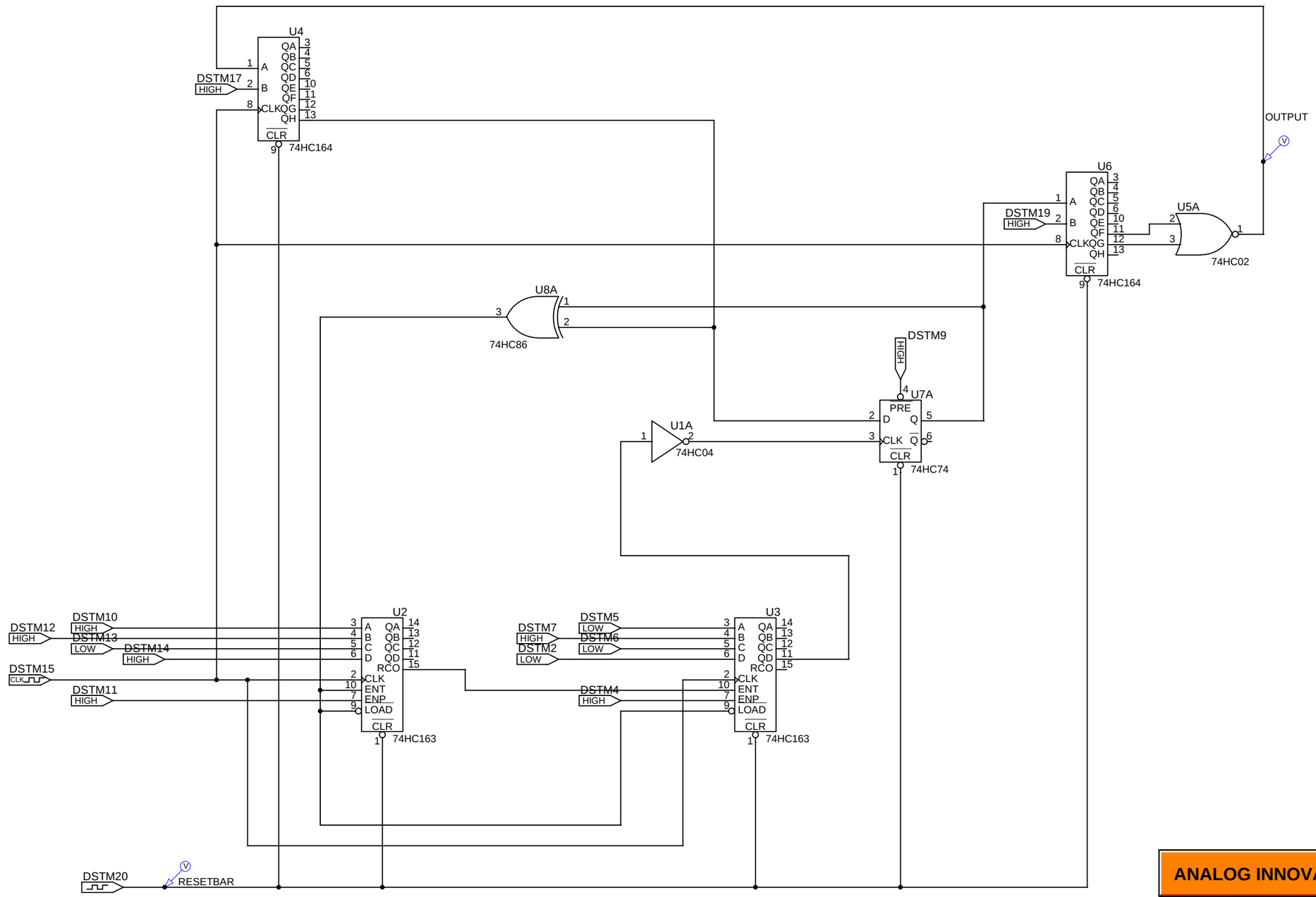

ANALOG INNOVATIONS MAIN PAGE

ANALOG INNOVATIONS, Inc.
824 E. CATHEDRAL ROCK DRIVE
PHOENIX, AZ 85048-6300
(480) 460-2350 FAX: (480) 460-2142

Title: Shift Register

Size	FileName:	REV
B	...\Sr-3.sch	A

February 10, 2002, 11:29 AM | Sheet 1 of 1

(A) SR-3.dat (active)

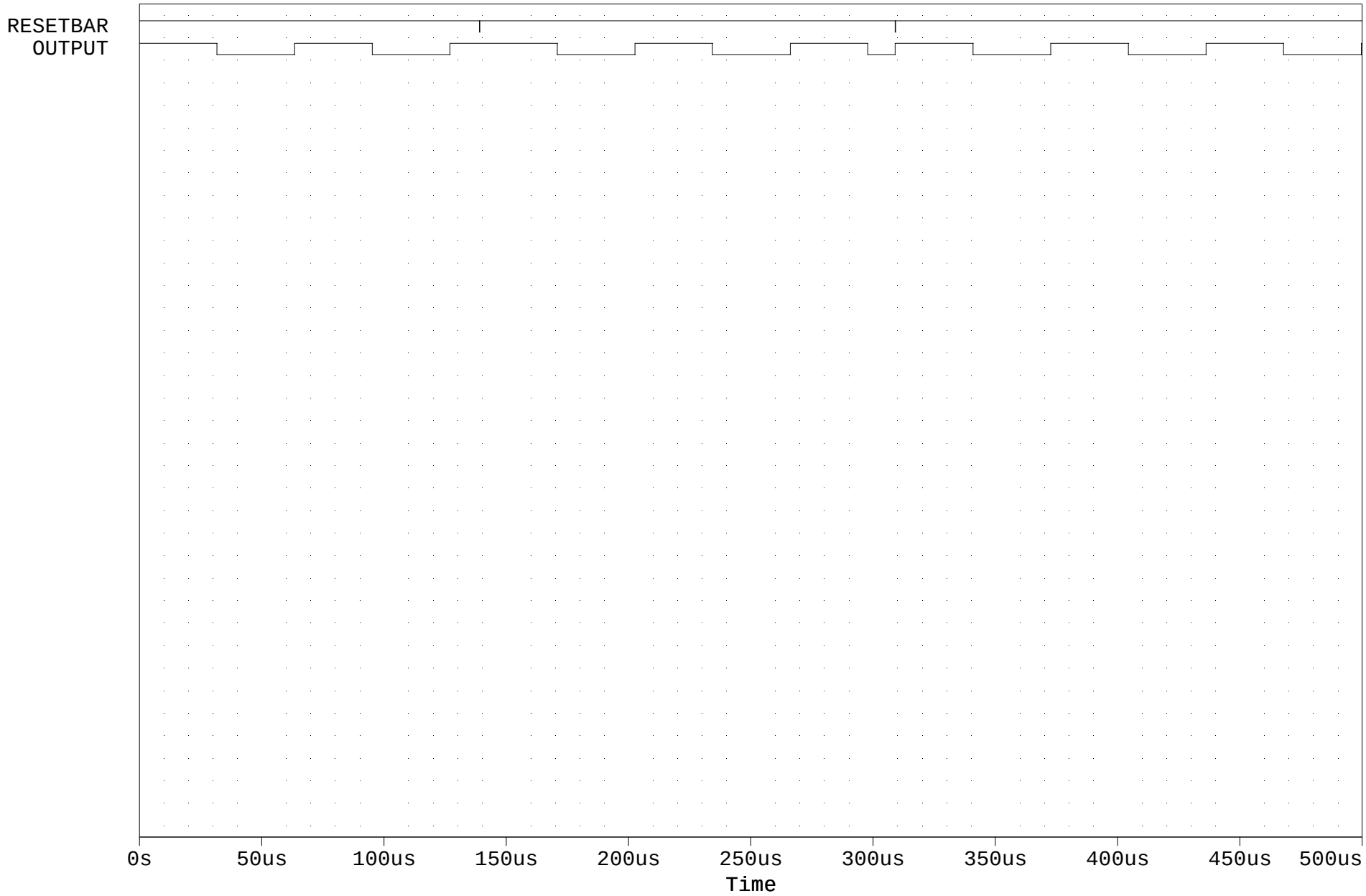

Analog Innovations, Inc.
824 E. Cathedral Rock Drive
Phoenix, AZ 85048-6300
(480)460-2350

ANALOG INNOVATIONS MAIN PAGE

Temperature(s): 27.0

February 10, 2002